Typical NGT-9000 Transponder with Chelton EFIS Wiring
No Converter/Filter Box

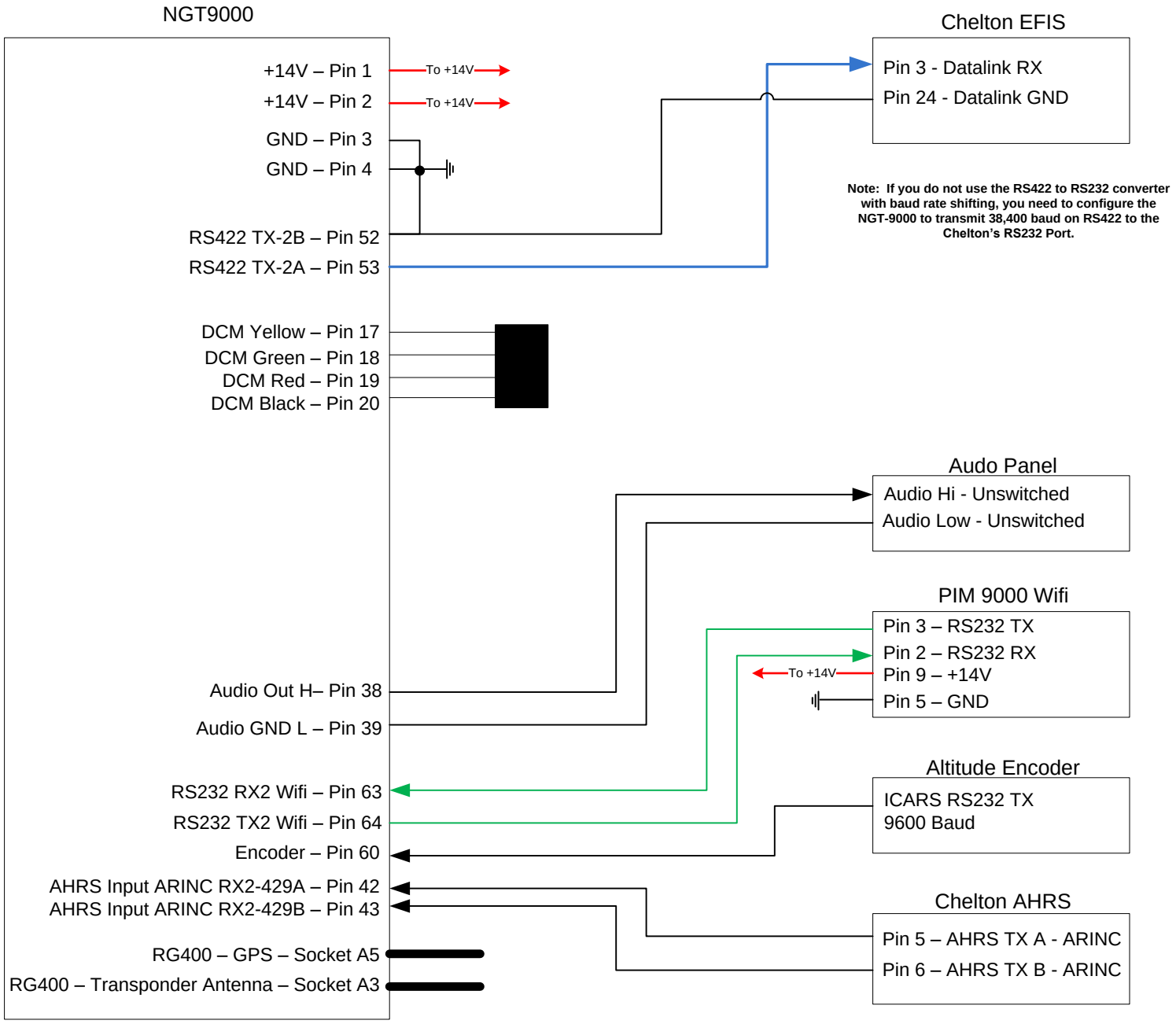
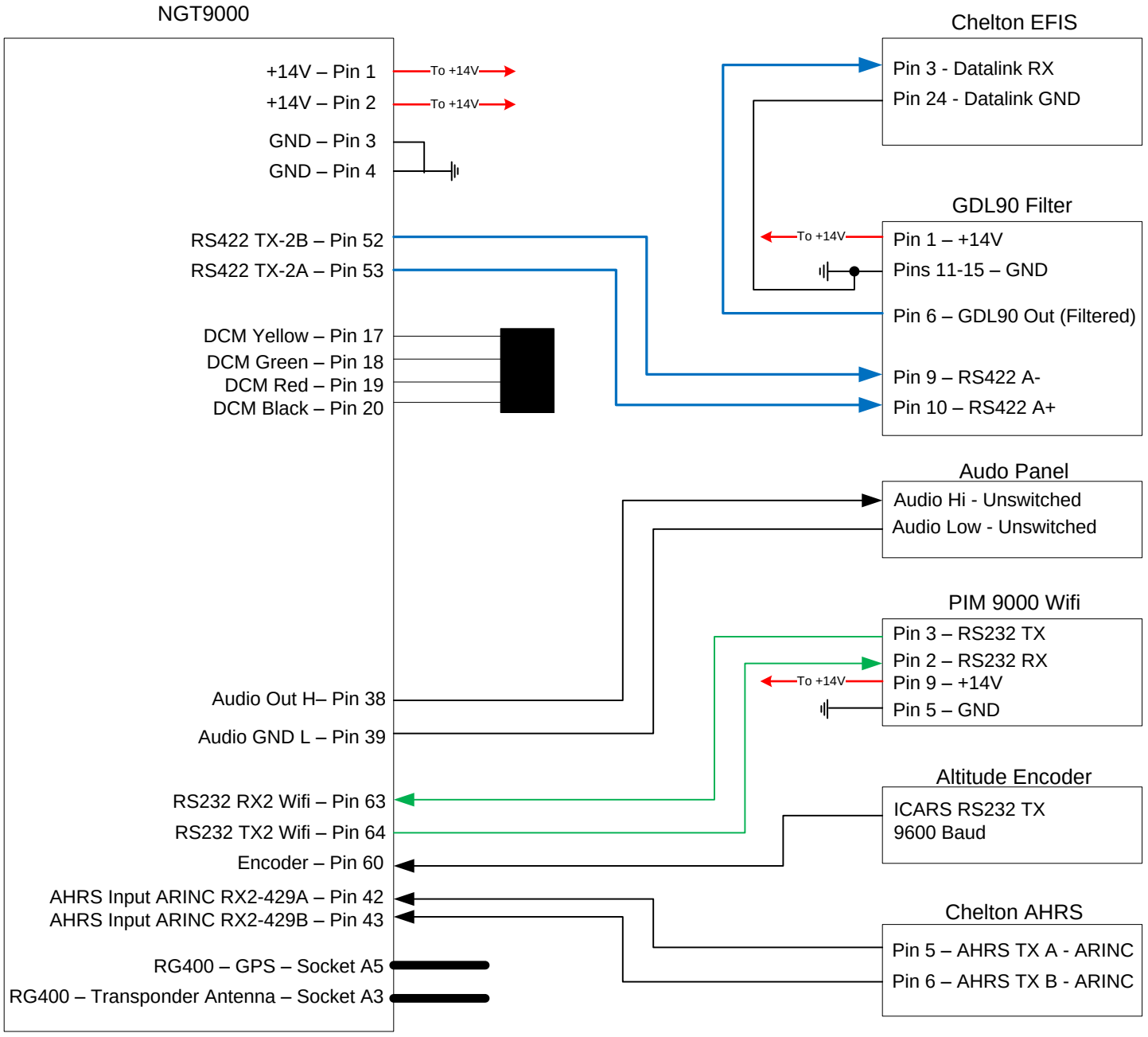
Typical NGT-9000 Transponder with Chelton EFIS Wiring With Converter/Filter Box